XTOOL | Dual Station

Quick Start Guide



Statement – – – – – – – – – – – – – – – – – – 01

List of items – – – – – – – – – – – – – – – – – 01

Introduction – – – – – – – – – – – – – – – – – 02

Install the Dual Station – – – – – – – – – – – – – 02

Use the Dual Station – – – – – – – – – – – – – – 09

Statement

Thank you for choosing xTool products!

If you use the product for the first time, read carefully all the accompanying materials of the product to improve your experience with it. To the extent permitted by applicable law, the Company shall not be liable for any loss or damage resulting from your failure to use the product in accordance with the instructions and requirements set forth in the Manual, or from your misuse or improper operation of the product.

The Company has collated the content of the Manual rigorously and carefully, but errors or omissions may remain.

The Company is committed to continuously improving product functions and service quality, and therefore reserves the right to change any product or software described in the Manual and the content of the Manual at any time.

The Manual is intended to help you use the product properly and does not include any description of hardware and software configuration. For product configuration, refer to the related contract (if any) and packing list, or consult your distributor. Images in the Manual are for reference only and the actual product may vary.

Protected by copyright laws and regulations, the Manual shall not be reproduced or transcribed in any way, or be transmitted on any wired or wireless network in any manner, or be translated into any language, or be modified in any way, such as content, image, or layout modification, without the prior written authorization of the Company.

The Company is committed to continuously improving the product and related materials. The product and the Manual are subject to change, and updates can be found at **xtool.com**.

List of items

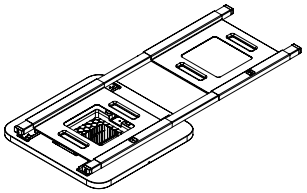

Dual Station base

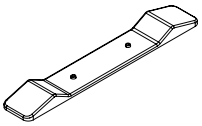

Stabilizing stand

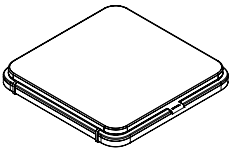

Heat Press Module



Thumb screw 1



Thumb screw 2



Quick Start Guide

Introduction

xTool Dual Station is intended for use only with xTool WonderPress. It supports two Heat Press Modules, one for heat pressing and the other for processing preparation, which improves efficiency for batch production.

Before use, read and follow the ***Safety Instructions*** and ***Quick Start Guide*** of xTool WonderPress.

Install the Dual Station

1 Turn off xTool WonderPress and wait for the heating plate to cool down

Press the power button on the heat press machine to turn it off. Wait until the heating plate has cooled down before proceeding.



xTool WonderPress
(sold separately)

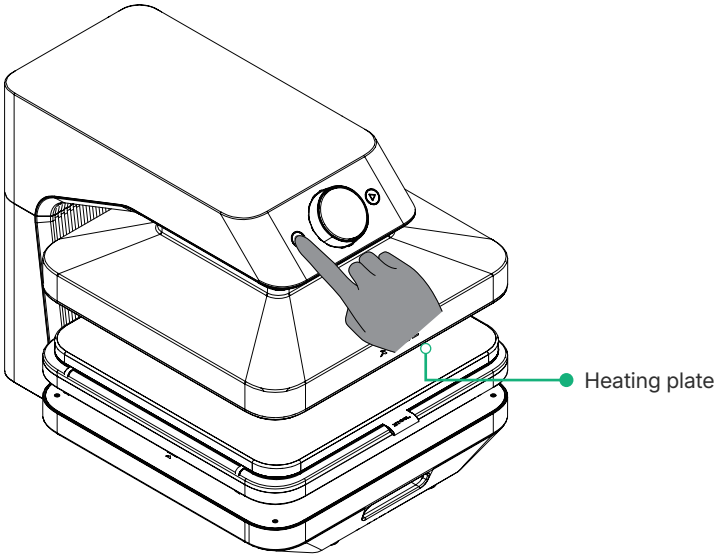

2 Remove the currently installed module

(1) Pull out the base by the handle.

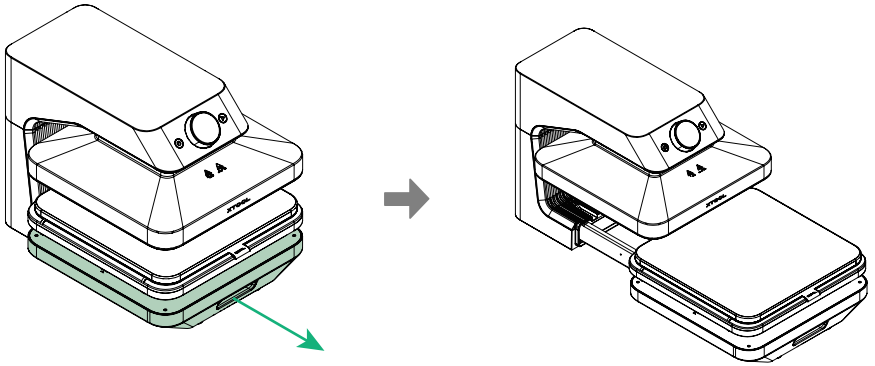

(2) Remove the currently installed module, then push the base back.

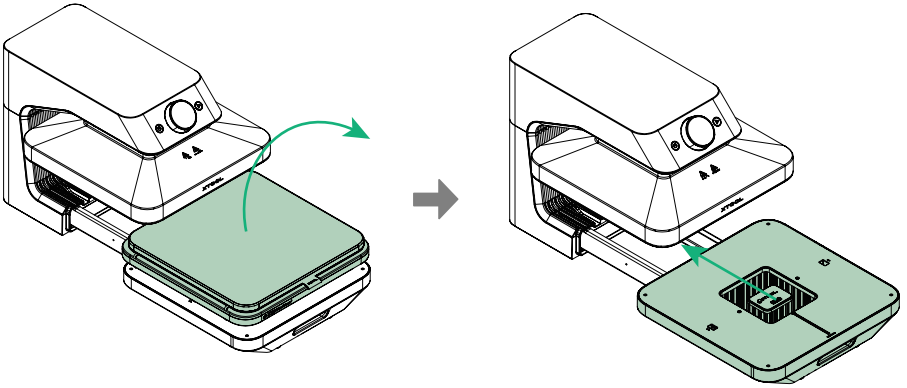

3 Install the stabilizing stand

Rotate the heat press by 90°, then install the stabilizing stand on its bottom.

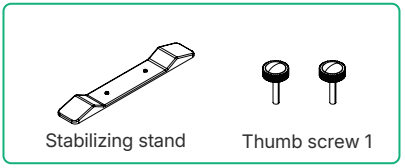

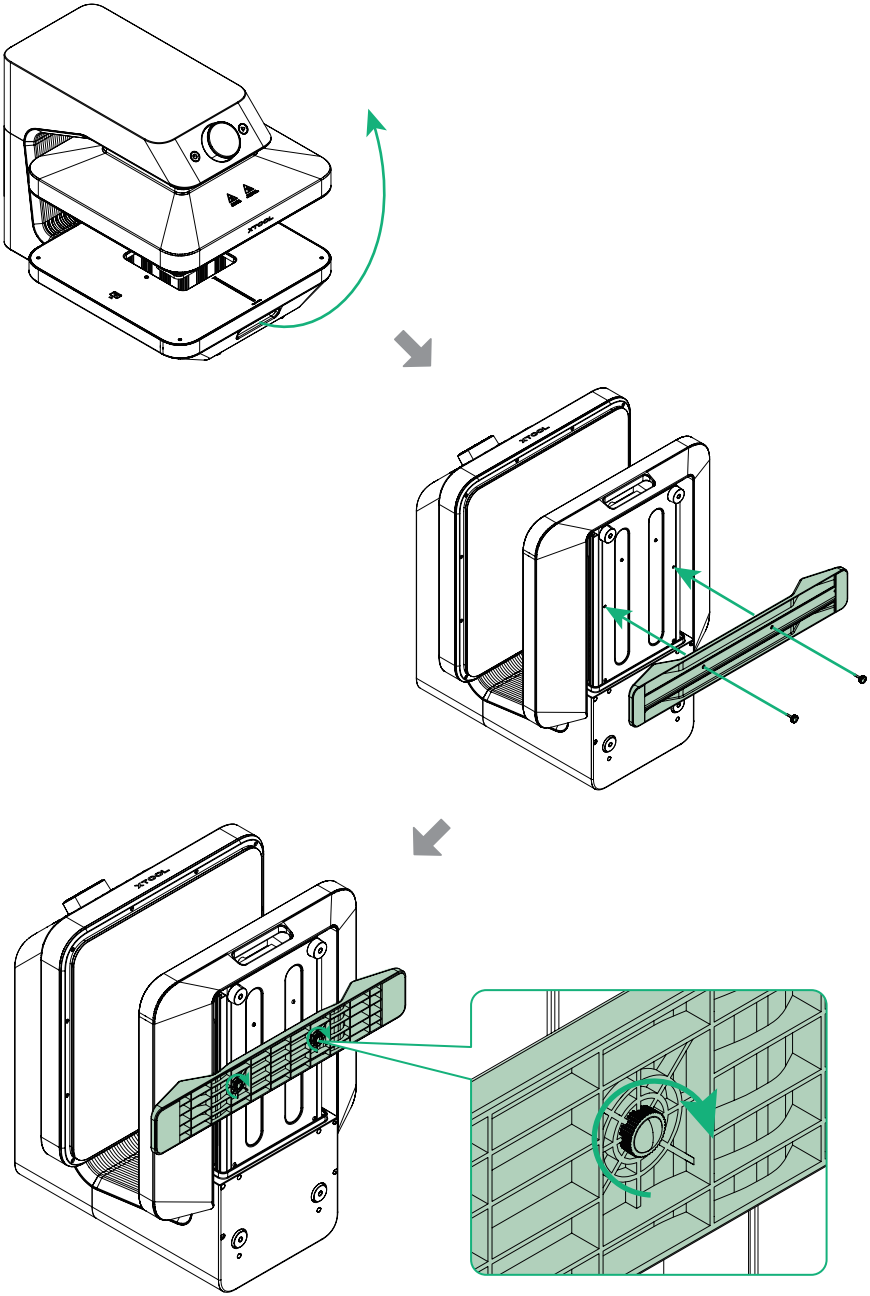

4 Install the Dual Station base

(1) Pull out the base by the handle.

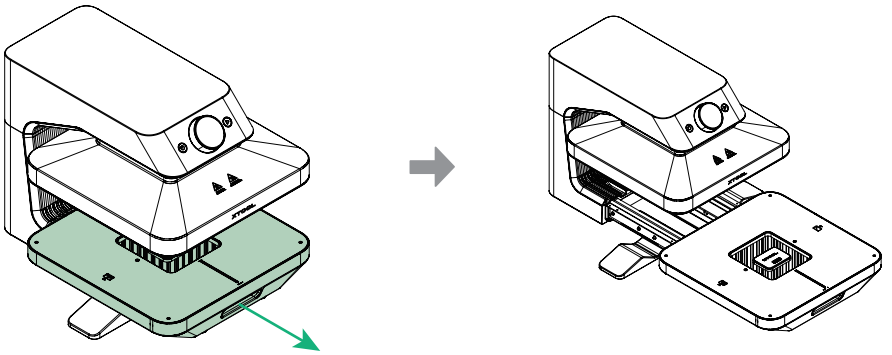

(2) Move the sliding rail to the middle.

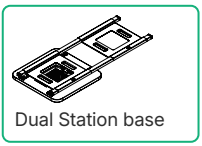
Dual Station base

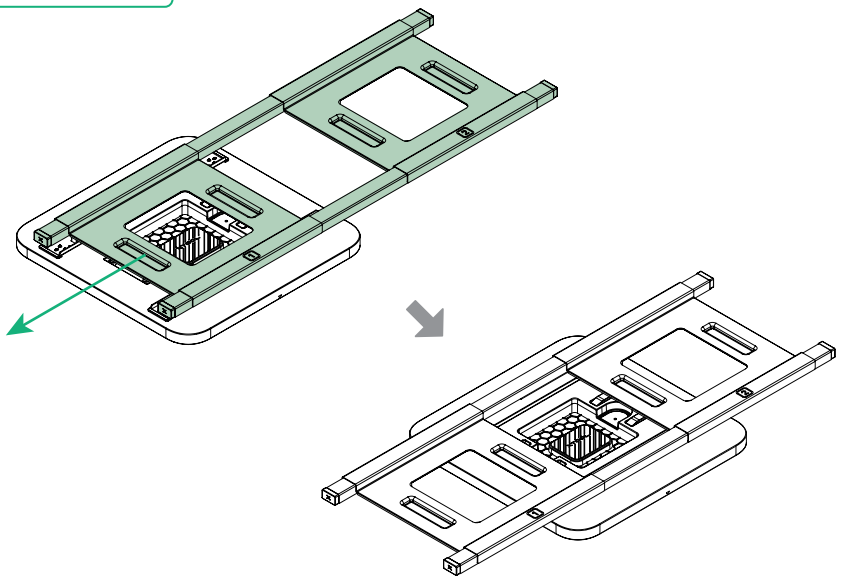

(3) Place the Dual Station base into the base of the main unit.

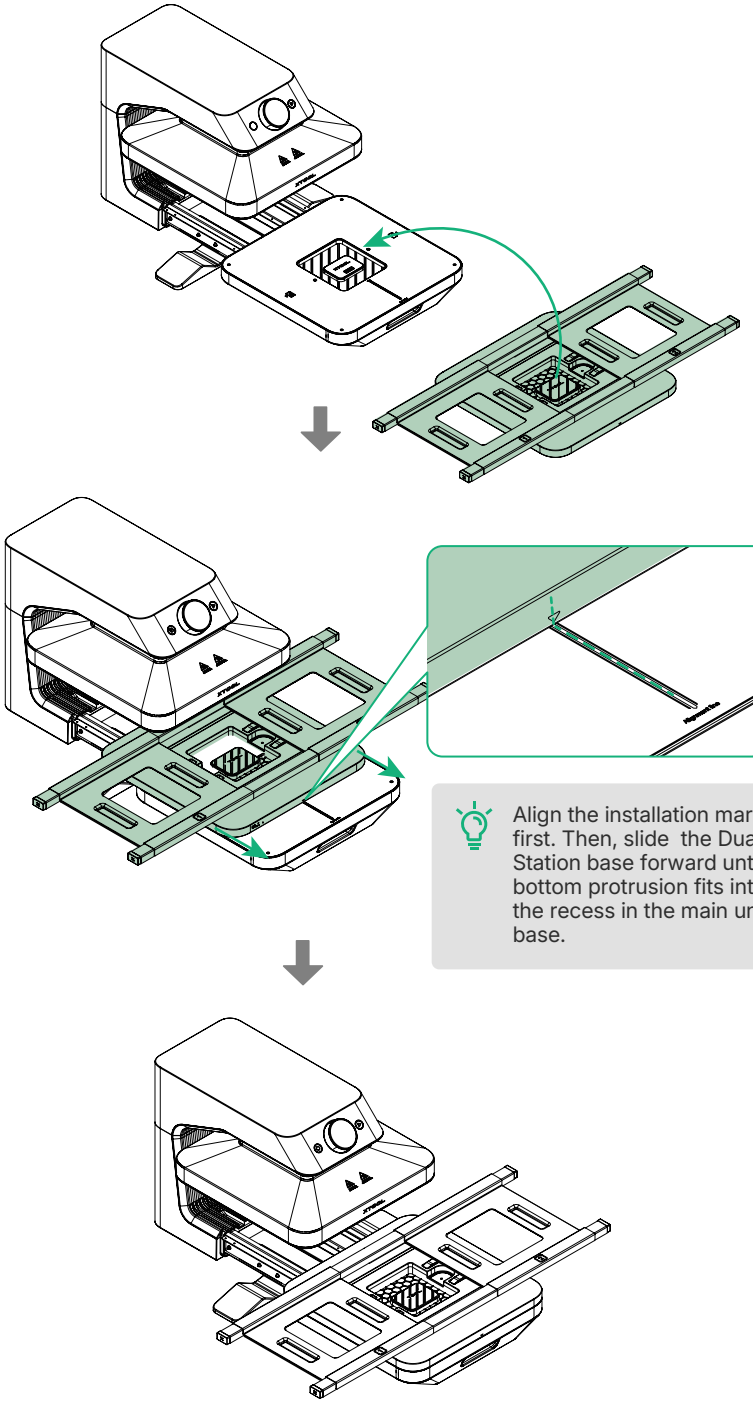

Align the installation marks first. Then, slide the Dual Station base forward until its bottom protrusion fits into the recess in the main unit base.

(4) Adjust the position of the sliding rail to expose the two screw holes, then tighten the screws to secure the Dual Station base.

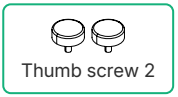

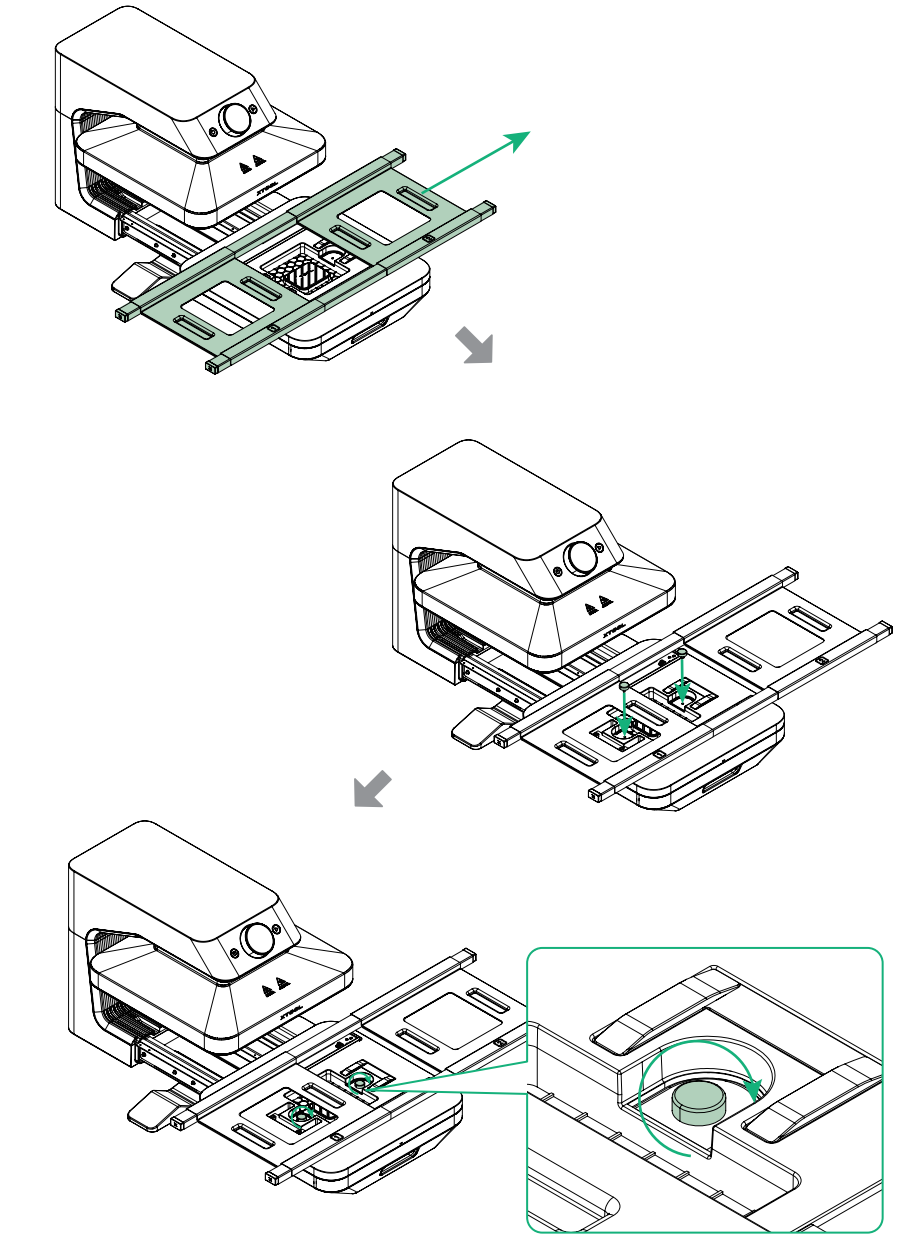

5 Install the Heat Press Modules

Place a Heat Press Module into each of the two stations on the Dual Station base.



Heat Press Module (included in the package of xTool WonderPress)



Heat Press Module (included in the package of xTool Dual Station)

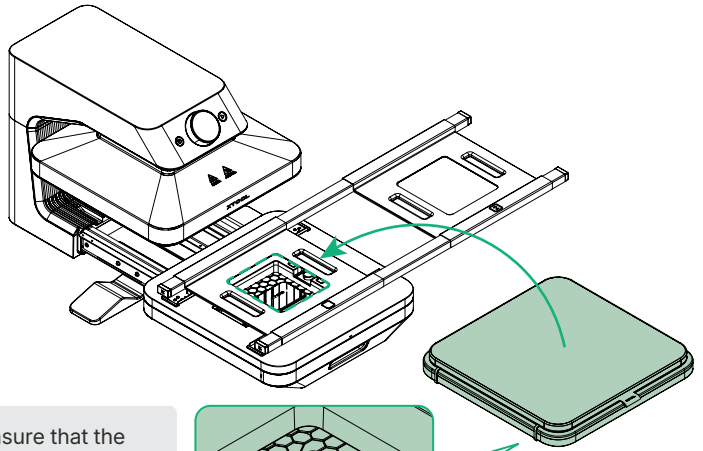

Ensure that the protrusion on the bottom of the module fits into the recess of the station.

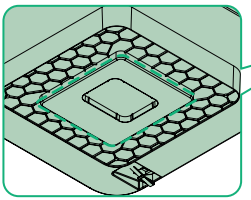

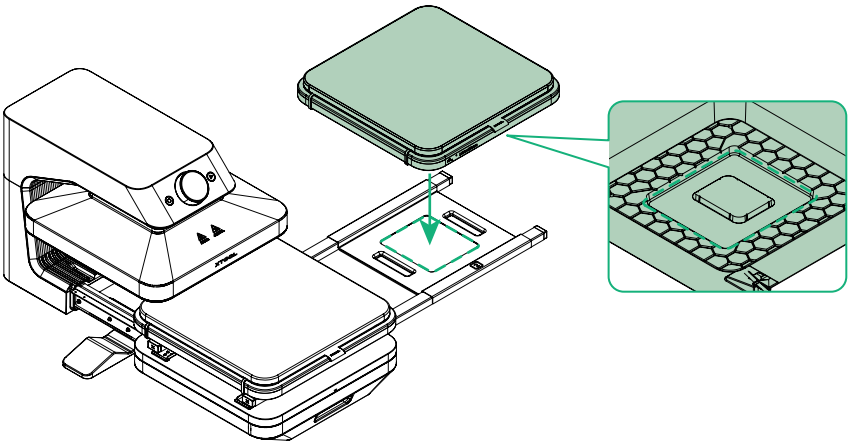

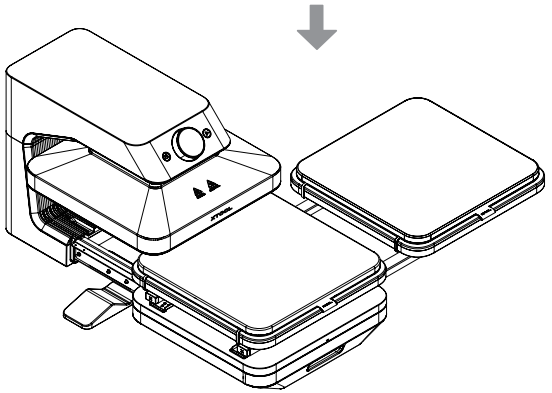

Use the Dual Station

1 Start heat pressing on one station

■ For detailed instructions on heat pressing, please refer to the ***Quick Start Guide*** for xTool WonderPress.

■ The Dual Station does not support auto mode. You need to press the **start/stop** button to begin processing.

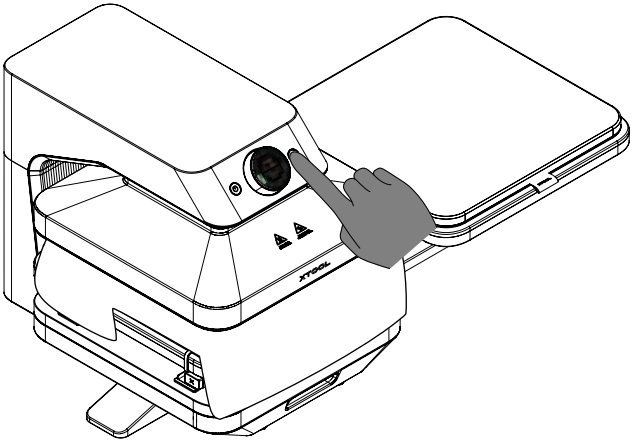

2 Prepare the next task on the other station

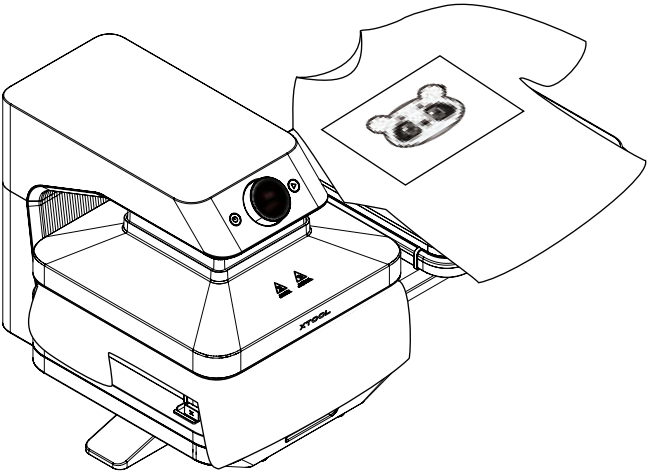

3 Switch stations and continue the next processing task

(1) When the previous station finishes processing, the heating plate will rise automatically.

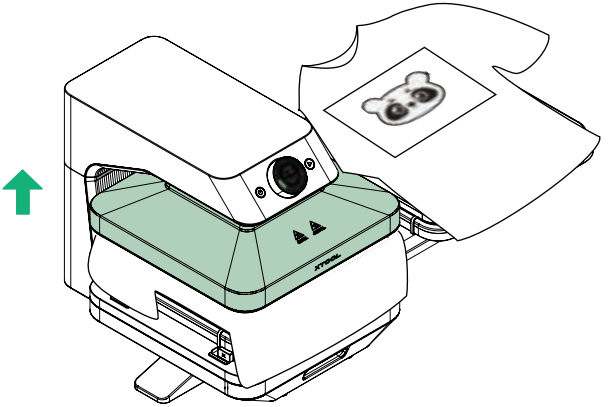

(2) Push the sliding rail to move the other station directly under the heating plate.

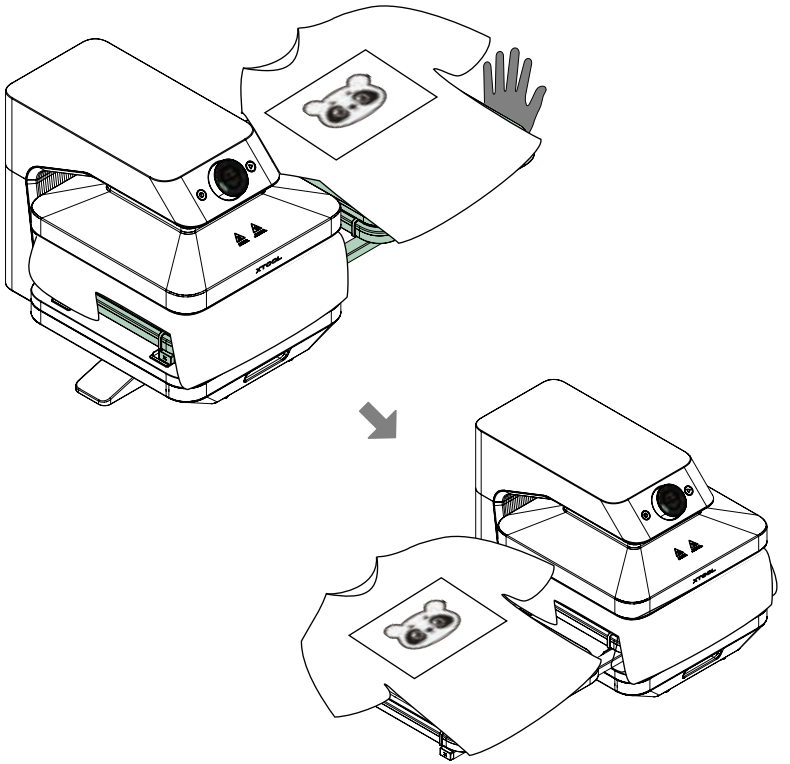

(3) Press the **start/stop** button to begin processing the next garment.

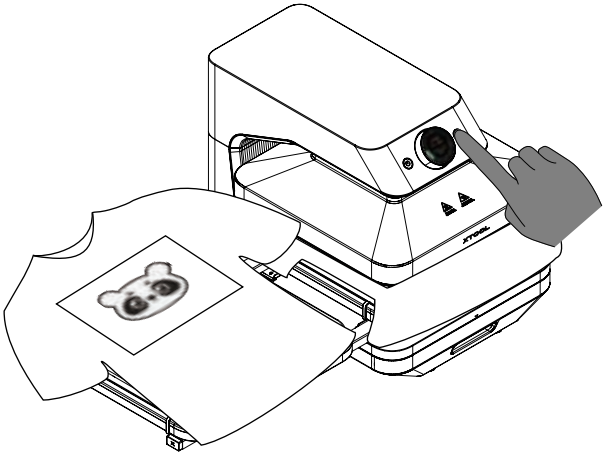

(4) Remove the processed garment, then peel off the DTF film after it cools down.

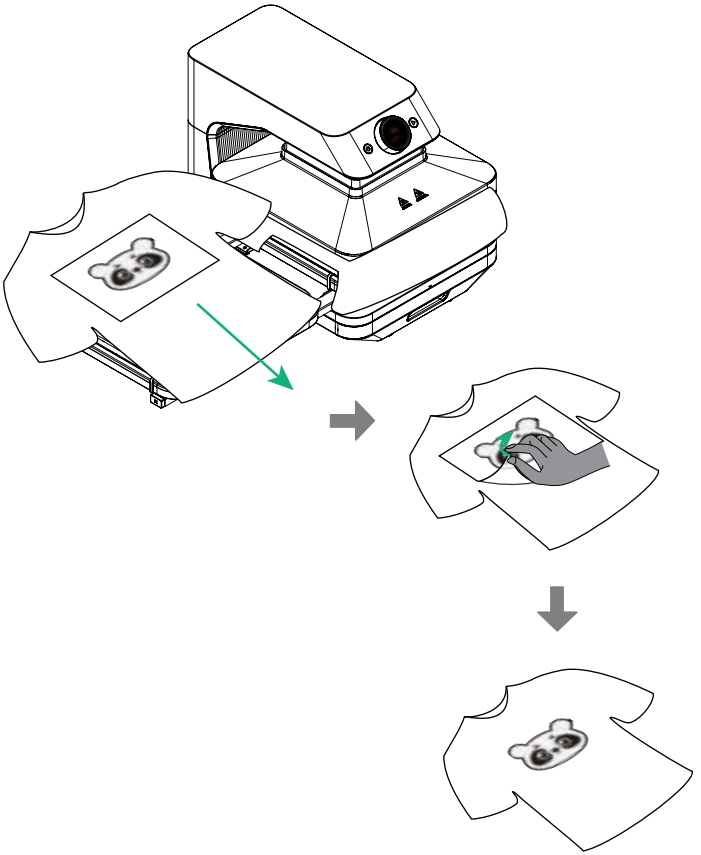

To continue processing more garments, repeat the steps above to prepare the garment, switch stations, and start processing.

XTOOL